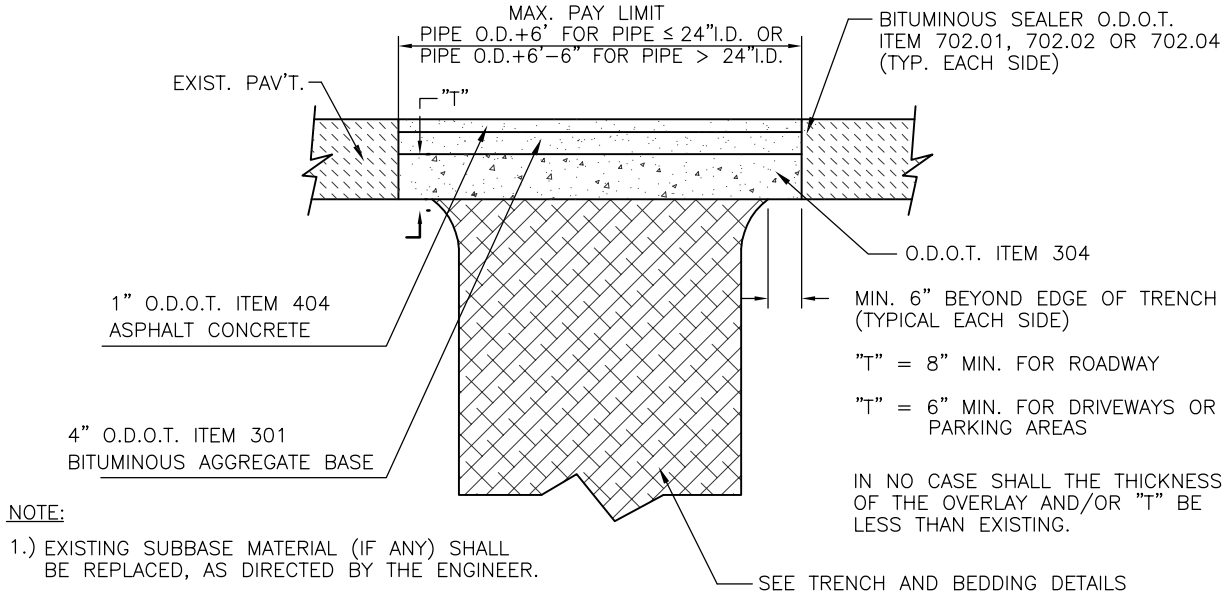

NOTE:

1.) EXISTING SUBBASE MATERIAL (IF ANY) SHALL BE REPLACED, AS DIRECTED BY THE ENGINEER.

TYPE 'E' PAVEMENT REPLACEMENT

NO SCALE

City Of Eastlake

Standard Construction Details

SD-5-05