NOTE:
6" CLEAN OUT SHALL BE USED FOR 6" SEWER AND LARGER.
SMALLER SIZE SEWERS AND LAMP HOLES SHALL HAVE SAME SIZE PIPE.

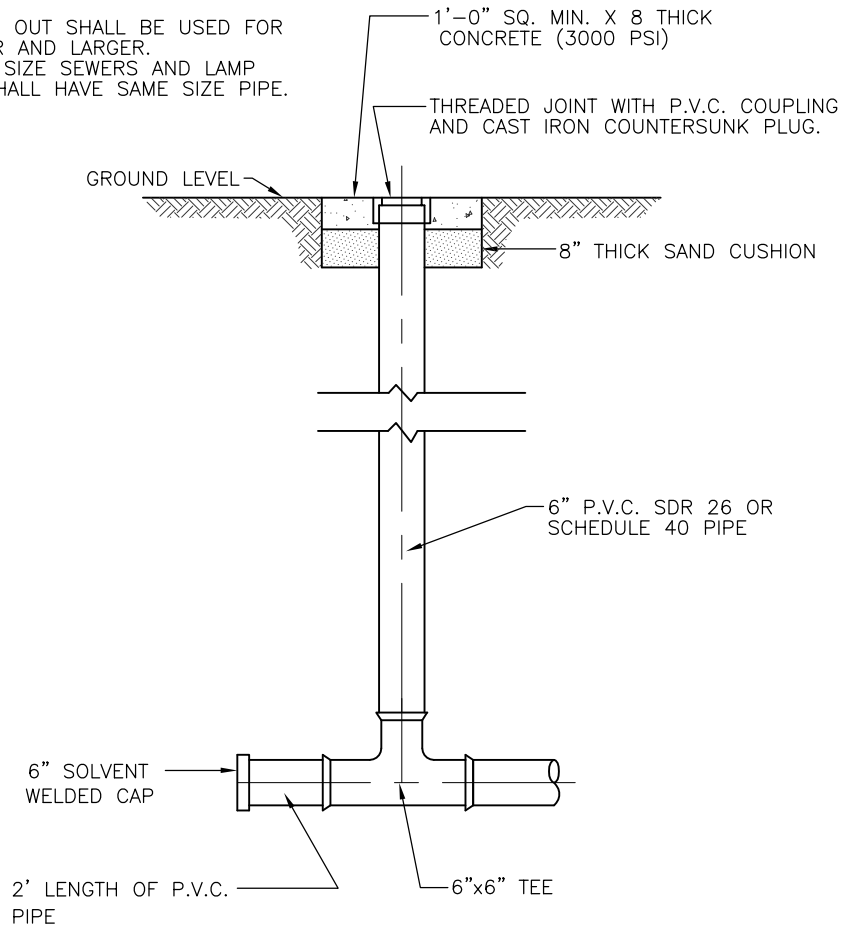

SANITARY CLEANOUT

NO SCALE

City Of Eastlake

Standard Construction Details

SD-2-03

H:\SHARED\CO_LAKE\Eastlake\stddet\SD-2-03.DWG 6/29/2006 9:36:07 AM EDT