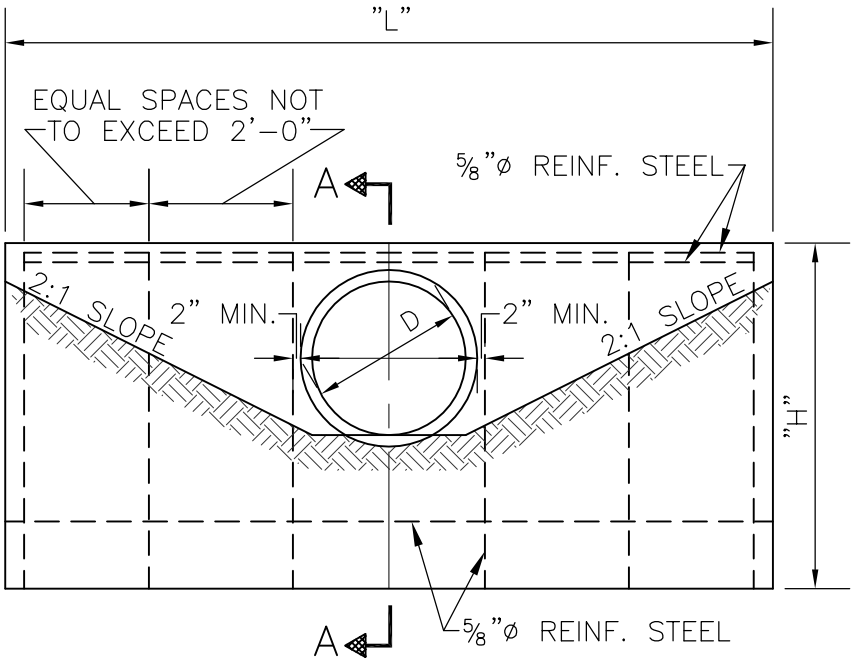

ELEVATION

CHAMFER ALL EXPOSED CORNERS ¾" OF AN INCH.

NOTE: WHERE SOIL BEARING CAPACITY IS LESS THAN 2600 P.S.F., INCREASE WIDTH OF BASE.

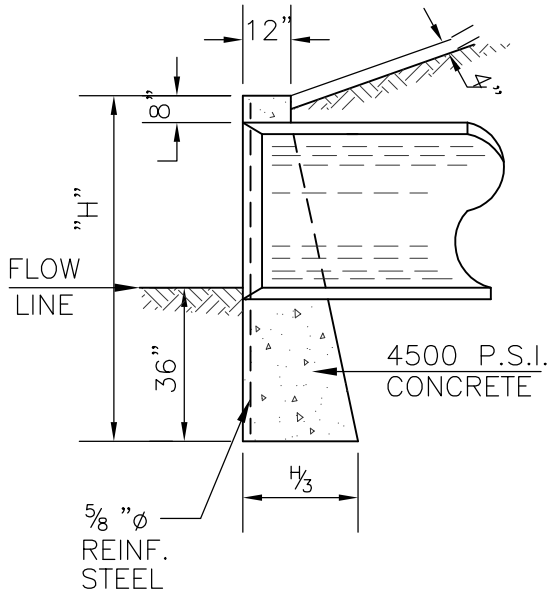

SECTION A – A

DIMENSIONS			QUANTITIES ONE HEADWALL	
DIAMETER	"H"	"L"	CONCRETE CU. YDS.	REINFORCING STEEL LBS.
12"	4'-11"	5'-8"	1.2	30
15"	5'-2"	7'-0"	1.7	41
18"	5'-5"	8'-4"	2.2	57
21"	5'-8"	9'-8"	2.8	62
24"	5'-11"	11'-0"	3.3	69
30"	6'-5"	13'-8"	4.7	92
36"	7'-0"	16'-4"	6.5	105

HW-1 HEADWALL DETAIL

NO SCALE

City Of Eastlake

Standard Construction Details

SD-2-01

H:\SHARED\CO_LAKE\Eastlake\stddet\SD-2-01.DWG 6/29/2006 9:32:22 AM EDT